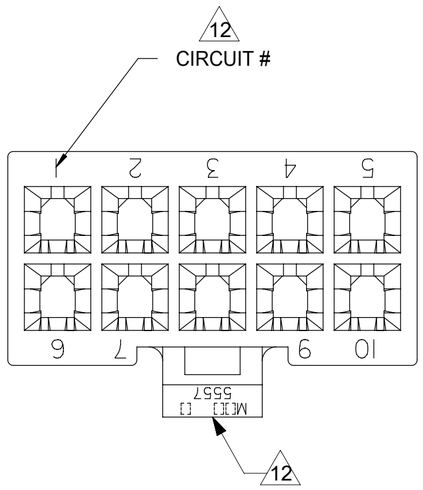

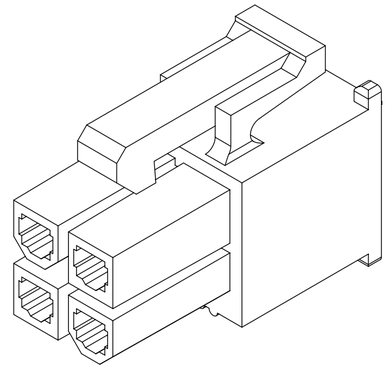

4 CKT SHOWN

NOTES:

1) MATERIAL:
"BLANK" = NYLON 6/6, UNFILLED UL94V-2, COLOR: NATURAL.
"BL" = NYLON 6/6, UNFILLED UL94V-2, COLOR: BLACK.
"BU" = NYLON 6/6, UNFILLED UL94V-2, COLOR: BLUE.
"RE"= NYLON 6/6, UNFILLED UL94V-2, COLOR: RED.
"YE"= NYLON 6/6, UNFILLED UL94V-2, COLOR: YELLOW
"GRE"= NYLON 6/6, UNFILLED UL94V-2, COLOR: GREEN.
"210" = NYLON 6/6, UNFILLED UL94V-0, COLOR: NATURAL.
"400" = NYLON 6/6, UNFILLED UL94V-0, COLOR: BLACK.
2) FINISH: NOT APPLICABLE
3) PRODUCT SPECIFICATION: PS-5556-001
4) PACKAGING: BULK
5) PART MATES WITH MOLEX PLUG #5559 AND HEADERS #5566, #5569.
6) PART TO BE USED WITH MOLEX FEMALE TERMINAL #5556.
7) PART IS NOT DESIGNED FOR CURRENT SHARING.
8) CONNECTORS ARE NOT TO BE MATED OR UNMATED WHILE CIRCUITS ARE LIVE.
9) WIRES ARE TO BE DRESSED IN SUCH A MANNER TO ALLOW THE TERMINALS TO FLOAT FREELY IN THE POCKET.
10) PART CONFORMS TO CLASS "B" REQUIREMENTS OF COSMETIC SPECIFICATION PS-45499-002 WITH THE EXCEPTION OF DISCOLORATION, FLASH AND SINK MEET CLASS "C" REQUIREMENTS.
11 TO BE MEASURED AT SURFACE Z
12 TEXT ON PART IS FOR REFERENCE ONLY. TEXT AND TEXT LOCATION MAY VARY DEPENDING ON PART NUMBER AND/OR TOOL.

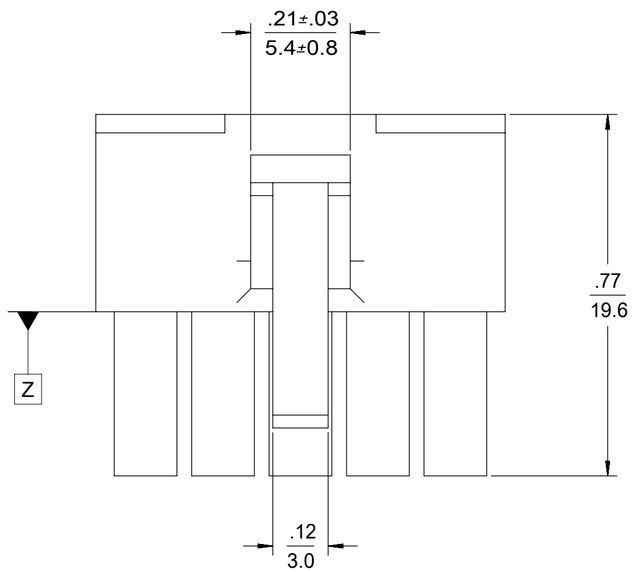

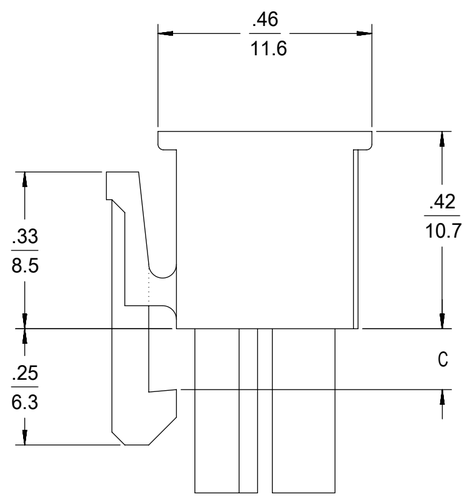

4-24 CKT

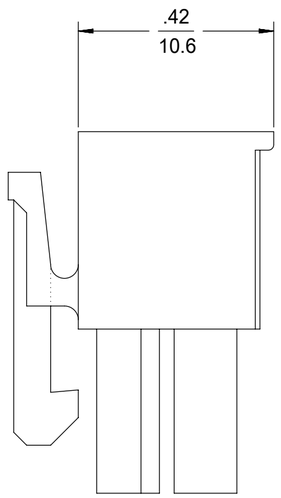

2 CKT ONLY

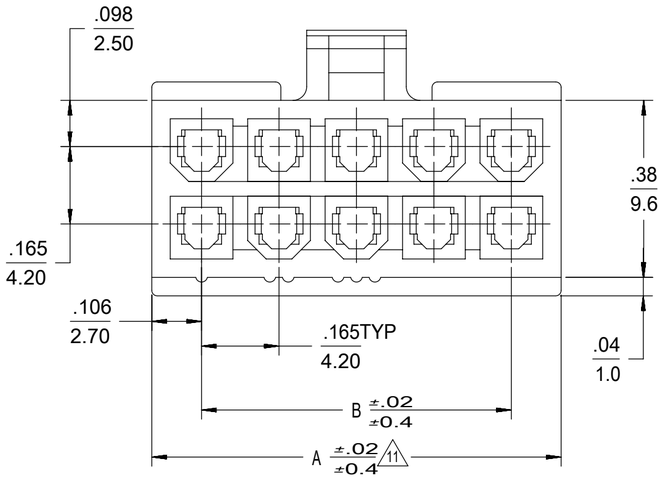

A	B	C	NO. OF CKTS.
2.031/(51.60)	1.819/(46.20)	.142/ (3.60)	24
1.866/(47.40)	1.654/(42.00)		22
1.701/(43.20)	1.488/(37.80)		20
1.535/(39.00)	1.323/(33.60)		18
1.370/(34.80)	1.157/(29.40)	.129/ (3.30)	16
1.205/(30.60)	0.992/(25.20)		14
1.039/(26.40)	0.827/(21.00		12
0.874/(22.20)	0.661/(16.80)		10
0.709/(18.00)	0.496/(12.60)		8
0.543/(13.80	0.331/(8.40)		6
0.378/(9.60)	0.165/(4.20)		4
0.213/(5.40)	—		2

QUALITY SYMBOLS
FA = 0
FC = 0
FP = 0
▼ = 0
C = 0
☒ = 0
■ = 0
C = 0

THIS DRAWING CONTAINS INFORMATION THAT IS PROPRIETARY TO MOLEX ELECTRONIC TECHNOLOGIES, LLC AND SHOULD NOT BE USED WITHOUT WRITTEN PERMISSION

OBS -225 P/N'S
EC NO: 105893 2016/03/25
DRWN: CSLAFTER
CHK'D:
APPR: FSMITH 2016/07/15

GENERAL TOLERANCES (UNLESS SPECIFIED)

	MM	INCH
4 PLACES	±	±
3 PLACES	±	± 0.01
2 PLACES	± 0.25	± 0.015
1 PLACES	± 0.38	±
0 PLACES	±	±

ANGULAR TOL ± 0.5

DRAFT WHERE APPLICABLE MUST REMAIN WITHIN DIMENSIONS

REV J14

DIMENSION UNITS: IN/MM
SCALE: 4:1
DRWN BY: S.MOCHIZUKI DATE: '90/02/22
CHK'D BY: M.FUKUSHIMA DATE: '97/01/08
APPR BY: FSMITH DATE: 2011/02/21
DRAWING SIZE: C
THIRD ANGLE PROJECTION

molex®

MINIFIT JR
RECEPTACLE HOUSING DUAL ROW 2-24 CKT

PRODUCT CUSTOMER DRAWING

SERIES	MATERIAL NUMBER	CUSTOMER
5557	SEE CHART	GENERAL MARKET

DOCUMENT NUMBER	DOC TYPE	DOC PART	SHEET NUMBER
SD-5557-003	PSD	000	1 OF 2

RELEASE STATUS | RELEASE DATE

FORMAT: Eng-lega-master-tb-prod-C
REVISION: C
DATE: 2016/02/04