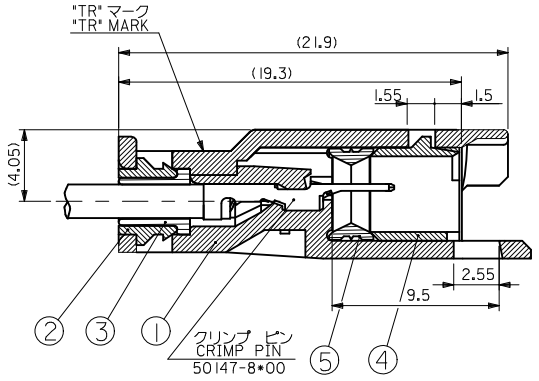

断面A－A（端子装着状態図）
SECT.A-A(TERM.ASSEMBLY DRAWING)

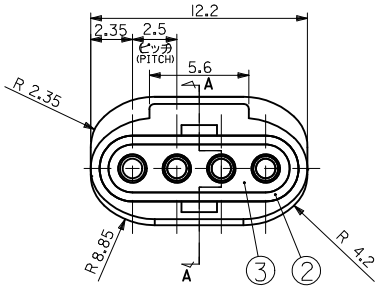

52266-0417

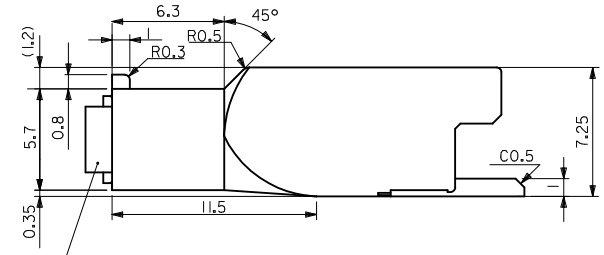

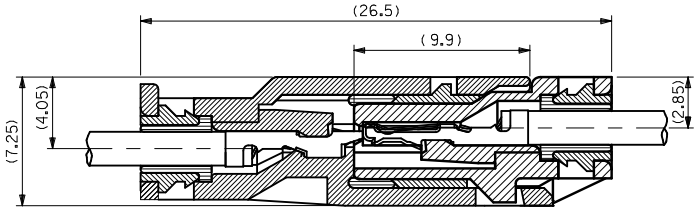

嵌合状態図
FULLY MATED CONDITION

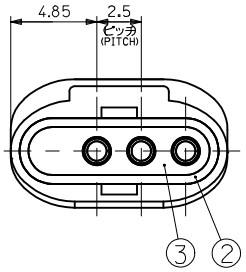

52266-0311

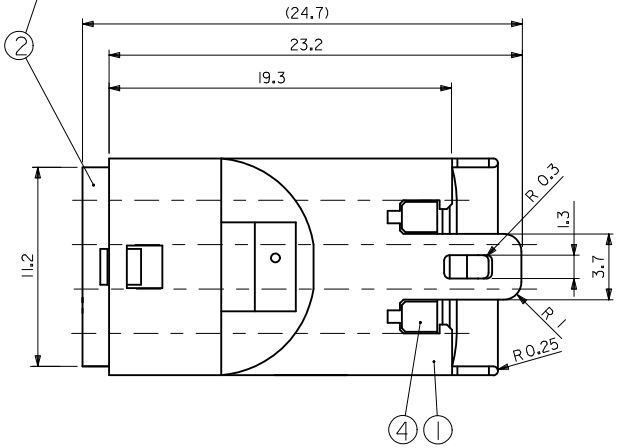

注 記
NOTE

1. 適合端子：50147-8*00
   APPLICABLE TERMINAL：50147-8*00
2. 嵌合相手：52213-**1*
   MATES WITH：52213-**1*
3. 製品仕様書： PS-52213-003
   PRODUCT SPECIFICATION：PS-52213-003
4. 取扱説明書 ： AS-52213-001
   APPLICATION SPECIFICATION ： AS-52213-001

黒 BLACK	52266-0311	3
茶 BROWN	52266-0417	4
ハウジングの色 HS'G COLOR	製品番号 MATERIAL NO.	極数 No. OF CKT.

シリコンゴム SILICONE	青 BLUE	SEAL	⑤
ポリエステル (15%G.F.) POLYESTER	灰 GRAY	SEAL STOPPER	④
シリコンゴム SILICONE	青 BLUE	WIRE END SEAL	③
ポリエステル (15%G.F.) POLYESTER	灰 GRAY	CAP	②
ポリエステル (15%G.F.) POLYESTER	表参照 SEE CHART	PLUG HOUSING	①
材 料 MATERIAL	色 COLOR	名 称 TITLE	

構成部品
COMPONENTS

REVISED
EC NO: JTR2012-0084 2012/02/29
DRWN:SANDO 2012/03/02
CH'KD:SANDO 2012/03/16
APPR:MAYAMOTO 2012/03/16
DESCRIPTION
REV B1

GENERAL TOLERANCES (UNLESS SPECIFIED)

10 UNDER	±0.2
10 OVER 30 UNDER	±0.25
30 OVER	±0.3
ANGULAR	±3 °

DRAFT WHERE APPLICABLE MUST REMAIN WITHIN DIMENSIONS

DIMENSION STYLE: MM ONLY	SCALE: 5:1	DESIGN UNITS: METRIC	THIRD ANGLE PROJECTION
DRAWN BY: M.SANO	DATE: 1991/07/17	TITLE: 2.5 MINI WATERPROOF CONN PLUG HSG ASSY (3 AND 4 CKT.)	
CHECKED BY: M.SAKANO	DATE: 1993/11/09		
APPROVED BY: MENOMOTO	DATE: 1993/11/09	MOLEX INCORPORATED	
MATERIAL NO.: SEE CHART		DOCUMENT NO.: SD-52266-002	SHEET NO.: 1 OF 1
SIZE: A2	THIS DRAWING CONTAINS INFORMATION THAT IS PROPRIETARY TO MOLEX INCORPORATED AND SHOULD NOT BE USED WITHOUT WRITTEN PERMISSION		